LiCHTECHNiC
ADVANCED LIGHTING TECHNOLOGIES

Façade Lighting

LED Flexible Strip Flexion Pro

CE RoHS Compliant

SMD 5050 LED TYPE
OUTDOOR
RGB
GARDENS
3000K RED 4000K GREEN 6000K BLUE YELLOW MONO COLOR
STAIRWAY
DC 24V INPUT VOLTAGE
SWIMMING POOLS
IP 68 INGRESS PROTECTION
BUILDINGS

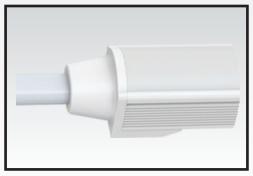

Features

- 15W/meter LED Flexible Strip Flexion Pro
- Colors include various single colors and RGB, 20m/reel for mono color and 15m/reel for RGB
- Each 100mm can be cut and connected via connectors

Highlights

- High flexibility with low heat emission
- Soft light effect, uniform color, no hot spot
- Compact dimensions and can be fixed in challenging installation
- Field installation friendly
- Cost effective

Technical Specifications

e Number	AD-AGQ-FB-BCBAI1	AD-AGQ-FB-BCCAI1	AD-AGQ-FB-BCFAI1	AD-AGQ-FB-BCHAI1	AD-AGQ-FB-BCIAI1	AD-AGQ-FB-BCJAI1	AD-AGQ-FB-BCKAI1	AD-AGQ-FB-BCNAI1
l								
Brightness	340lm per Meter	380lm per Meter	410lm per Meter	70lm per Meter	260lm per Meter	50lm per Meter	65lm per Meter	-
LED type	SMD 5050	SMD 5050	SMD 5050	SMD 5050	SMD 5050	SMD 5050	SMD 5050	SMD 5050
Beam angle	115°	115°	115°	115°	115°	115°	115°	115°
Color	3000K	4000K	6000K	Red	Green	Blue	Yellow	RGB
CRI	80	80	80	80	80	80	80	-
nmental								
Operating temperature	-20°- 40°	-20°- 40°	-20°- 40°	-20°- 40°	-20°- 40°	-20°- 40°	-20°- 40°	-20°- 40°
Operating humidity range	0~100%	0~100%	0~100%	0~100%	0~100%	0~100%	0~100%	0~100%
Ingress protection	IP68	IP68	IP68	IP68	IP68	IP68	IP68	IP68
LED lifetime	50,000hrs	50,000hrs	50,000hrs	50,000hrs	50,000hrs	50,000hrs	50,000hrs	50,000hrs
Mains input	24VDC	24VDC	24VDC	24VDC	24VDC	24VDC	24VDC	24VDC
Power consumption maximum	15W/ Meter	15W/ Meter	15W/ Meter	15W/ Meter	15W/ Meter	15W/ Meter	15W/ Meter	15W/ Meter
al								
Number of LEDs	60pcs/ Meter	60pcs/ Meter	60pcs/ Meter	60pcs/ Meter	60pcs/ Meter	60pcs/ Meter	60pcs/ Meter	60pcs/ Meter
Housing	PVC	PVC	PVC	PVC	PVC	PVC	PVC	PVC
Cover	PVC	PVC	PVC	PVC	PVC	PVC	PVC	PVC
Bending Direction	Left-right	Left-right	Left-right	Left-right	Left-right	Left-right	Left-right	Left-right
Connection Length	20 Meter	20 Meter	20 Meter	20 Meter	20 Meter	20 Meter	20 Meter	15 Meter
Dimensions	12(w) x 22(h) mm	12(w) x 22(h) mm	12(w) x 22(h) mm	12(w) x 22(h) mm	12(w) x 22(h) mm	12(w) x 22(h) mm	12(w) x 22(h) mm	12(w) x 22(h) mm
Cut Dimension	100mm	100mm	100mm	100mm	100mm	100mm	100mm	100mm
Controller	NA	NA	NA	NA	NA	NA	NA	LEDIGAMI

All specifications are subjected to change without notice.

Technical Drawing

Unit : mm

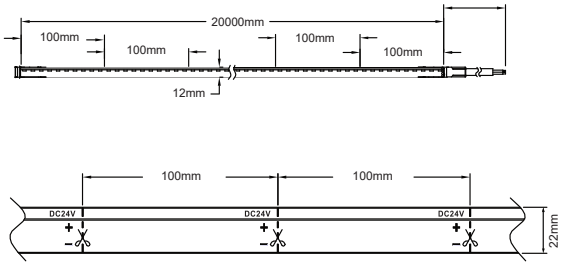

For 3000K, 4000K & 6000K models

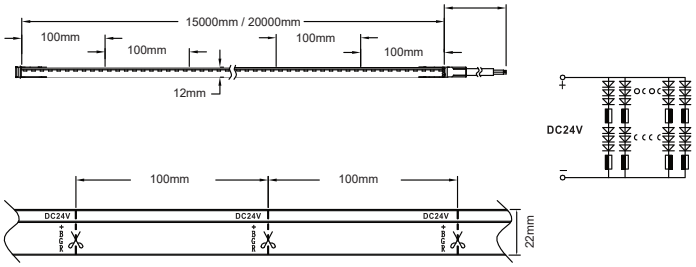

For Red, Green, Blue, Yellow and RGB models

Tolerance for dimensions = ±2mm

Structural Diagram

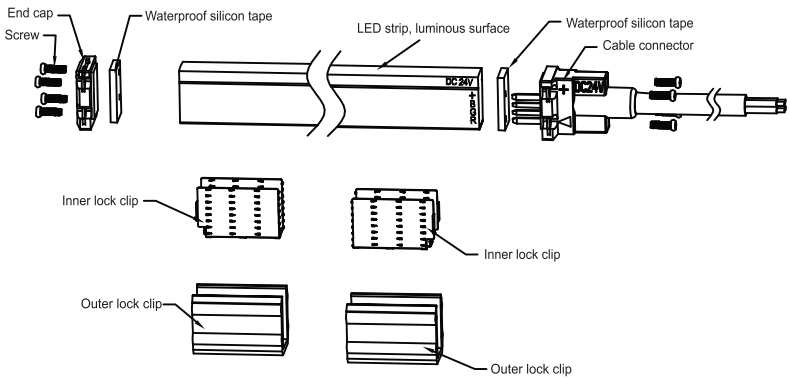

Bending Direction

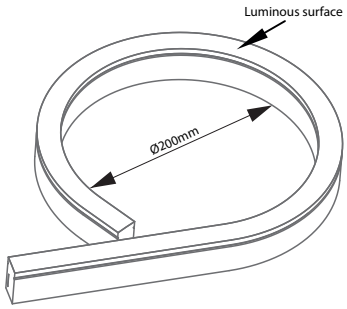

Accessories

Cable connector 2 meters/ reel (for single color only)		Inner lock clip 2pcs/ reel	
Cable connector 2 meters/ reel (for RGB only)		Outer lock clip 2pcs/ reel	
End caps 1pc/ reel		Screws 8pcs/ reel	
Waterproof silicon tape 2pcs/ reel		Mounting Clips 80pcs/ reel (Single color) 60pcs/ reel (RGB)	

All specifications are subjected to change without notice.